# Spiral wound gaskets

| DN (mm) | NPS (in) |
|---|---|
| 15 | 1/2 |
| 20 | 3/4 |
| 25 | 1 |
| 32 | 1 1/4 |
| 40 | 1 1/2 |
| 50 | 2 |
| 65 | 2 1/2 |
| 80 | 3 |
| 90 | 3 1/2 |
| 100 | 4 |
| 125 | 5 |
| 150 | 6 |
| 200 | 8 |
| 250 | 10 |
| 300 | 12 |
| 350 | 14 |
| 400 | 16 |
| 450 | 18 |
| 500 | 20 |
| 550 | 22 |
| 600 | 24 |

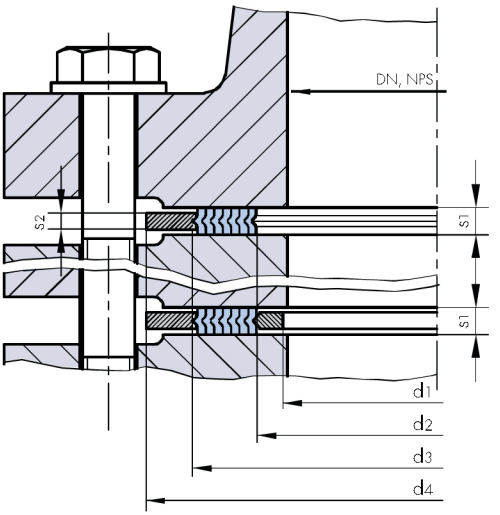


## SWG for BS 1560 and ASME B 16.5 flanges

| NPS (in) | d1 (mm) | | d2 (mm) | | d3 (mm) | d4 (mm) | | | | | | |
|---|---|---|---|---|---|---|---|---|---|---|---|---|
| Class (lb) | 150-400 | 600-2500 | 150-400 | 600-2500 | 150-2500 | 150 | 300 | 400 | 600 | 900 | 1500 | 2500 |
| 1/2 | 12.7 | 12.7 | 19.1 | 19.1 | 31.8 | 44.4 | 50.8 | 50.8 | 50.8 | 60.3 | 60.3 | 66.7 |
| 3/4 | 20.6 | 20.6 | 27 | 27 | 39.7 | 53.9 | 63.5 | 63.5 | 63.5 | 66.7 | 66.7 | 73 |
| 1 | 27 | 27 | 33.3 | 33.3 | 47.6 | 63.5 | 69.8 | 69.8 | 69.8 | 76.2 | 76.2 | 82.5 |
| 1 1/4 | 41.3 | 39.7 | 47.6 | 46 | 60.3 | 73 | 79.4 | 79.4 | 79.4 | 85.7 | 85.7 | 101.6 |
| 1 1/2 | 49.2 | 47.6 | 55.6 | 54 | 69.9 | 82.5 | 92.1 | 92.1 | 92.1 | 95.2 | 95.2 | 114.3 |
| 2 | 61.9 | 60.3 | 71.4 | 69.9 | 85.7 | 101.6 | 108 | 108 | 108 | 139.7 | 139.7 | 142.8 |
| 2 1/2 | 74.6 | 73 | 84.1 | 82.6 | 98.4 | 120.6 | 127 | 127 | 127 | 161.9 | 161.9 | 165.1 |
| 3 | 95.3 | 92.1 | 104.8 | 101.6 | 120.7 | 133.4 | 146.1 | 146.1 | 146.1 | 165.1 | 171.5 | 193.7 |
| 3 1/2 | 108 | 104.8 | 117.5 | 114.3 | 133.4 | 158.8 | 161.9 | 158.7 | 158.7 | | | |
| 4 | 117.5 | 114.3 | 130.2 | 127 | 149.2 | 171.5 | 177.8 | 174.6 | 190.5 | 203.2 | 206.4 | 231.7 |
| 5 | 144.5 | 141.3 | 157.2 | 154 | 177.8 | 193.7 | 212.7 | 209.5 | 238.1 | 244.5 | 250.8 | 276.2 |
| 6 | 171.5 | 168.3 | 184.2 | 181 | 209.6 | 219.1 | 247.7 | 244.5 | 263.5 | 285.8 | 279.4 | 314.3 |
| 8 | 222.3 | 219.1 | 235 | 231.8 | 263.5 | 276.2 | 304.8 | 301.6 | 317.5 | 355.6 | 349.3 | 384.1 |
| 10 | 276.2 | 269.9 | 288.9 | 282.6 | 317.5 | 336.5 | 358.8 | 355.6 | 396.9 | 431.8 | 431.8 | 473 |
| 12 | 330.2 | 323.8 | 342.9 | 336.5 | 374.6 | 406.4 | 419.1 | 415.9 | 454 | 495.3 | 517.5 | 546.1 |
| 14 | 361.9 | 355.6 | 374.6 | 368.3 | 406.4 | 447.7 | 482.6 | 479.4 | 488.9 | 517.5 | 574.7 | |
| 16 | 412.7 | 406.4 | 425.4 | 419.1 | 463.5 | 511.2 | 536.6 | 533.4 | 561.9 | 571.5 | 638.1 | |
| 18 | 466.7 | 460.4 | 479.4 | 473.1 | 527 | 546.1 | 593.7 | 590.5 | 609.6 | 635 | 701.7 | |
| 20 | 517.5 | 511.2 | 530.2 | 523.9 | 577.8 | 603.2 | 650.9 | 644.5 | 679.5 | 695.3 | 752.4 | |
| 22 | 574.4 | 568.4 | 587.4 | 581.1 | 635 | 657.2 | 701.7 | 698.5 | 730.3 | | | |
| 24 | 622.3 | 615.9 | 635 | 628.6 | 685.8 | 714.4 | 771.5 | 765.2 | 787.4 | 835 | 898.5 | |